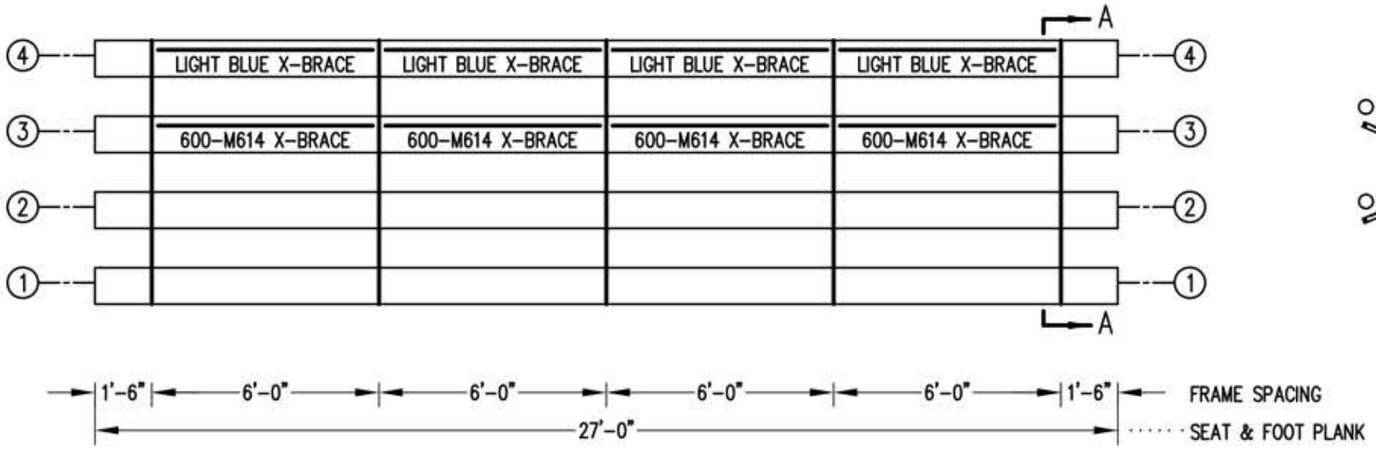

SEAT & FRAMING PLAN

1/4" = 1'-0"

72 NET SEATS @ 18" PER SEAT

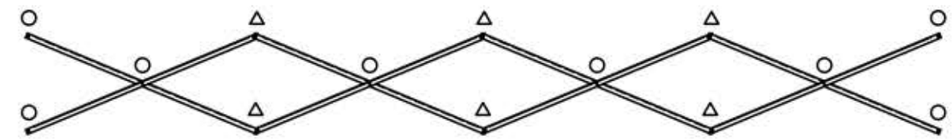

X-BRACE DETAIL

N.T.S.

○ 7/16" X 1" GALV. MACH. BOLT

△ 7/16" X 1.1/2" GALV. MACH. BOLT

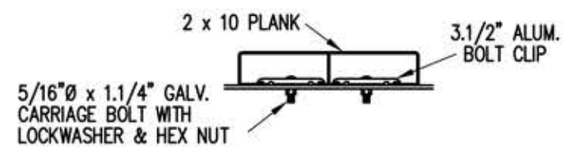

BOLT CLIP DETAIL

1.1/2" = 1'-0"

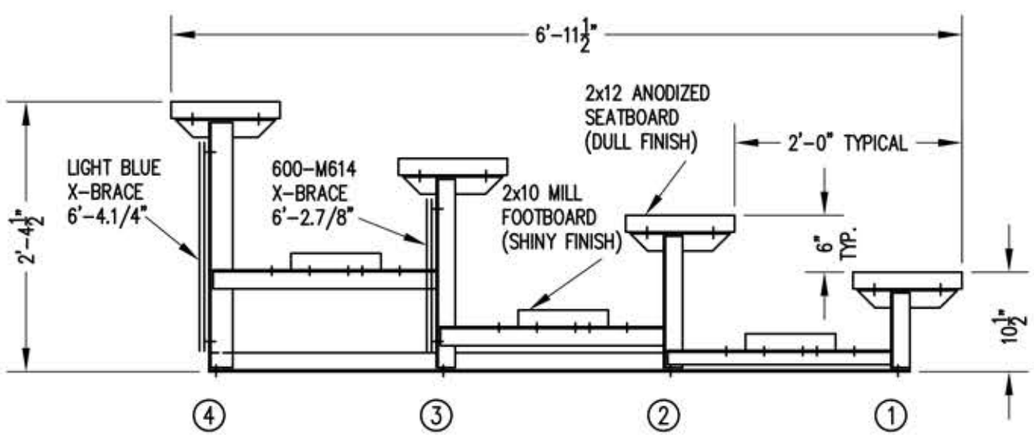

SECTION AA

3/4" = 1'-0"

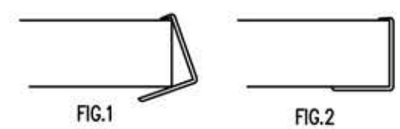

1) LOCATE THE CHANNEL END CAP AS SHOWN IN FIG. 1.

2)TAP END CAP INTO PLACE WITH RUBBER MALLET OR SOFT WOOD. FIG.2

3) DRILL TWO 5/32" HOLES THROUGH THE BOTTOM FLANGE AND THE BOTTTOM OUTSIDE PLANK FLANGES. INSTALL TWO 3/16" DRIVE RIVETS. (2 PER PLANK)

END CAP DETAIL

N.T.S.

DLW 4-27

SAF

SIGHTLINES
ATHLETIC FACILITIES
CRESTWOOD, KY
800-609-1545